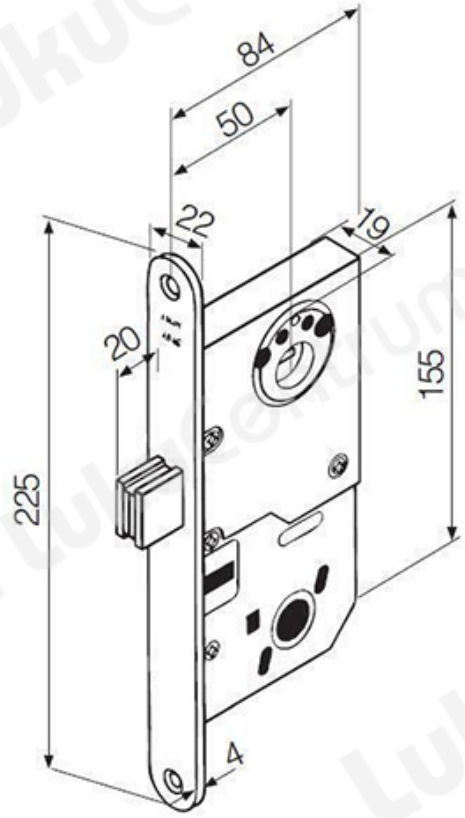TOOTENIMETUS	SOODUS	HIND
Lock case ABLOY 4181 Fe/ZL	101.53 ?	116.03 ?