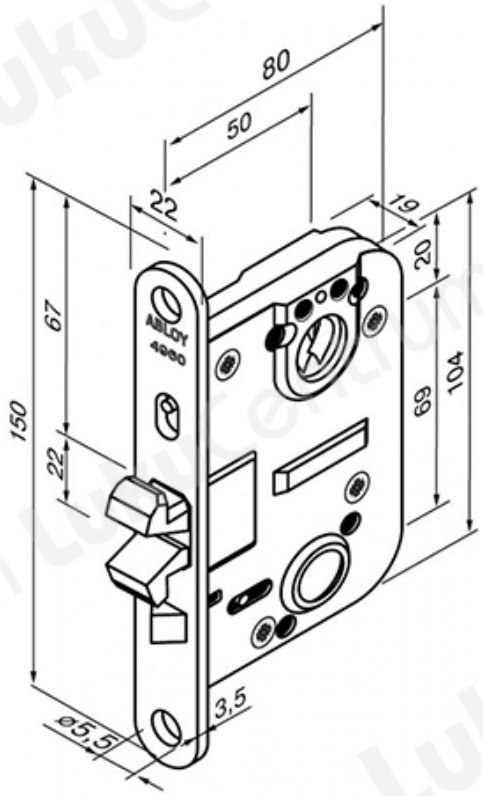TOOTENIMETUS	SOODUS	HIND
[illegible] CY018U, CY018T, CY028C, CY028U, CY028T, CY029C, CY029U, CY029T, CY060U, CY060T, CY061U, CY061T, CY062U, CY062T	60.079	183,16 €