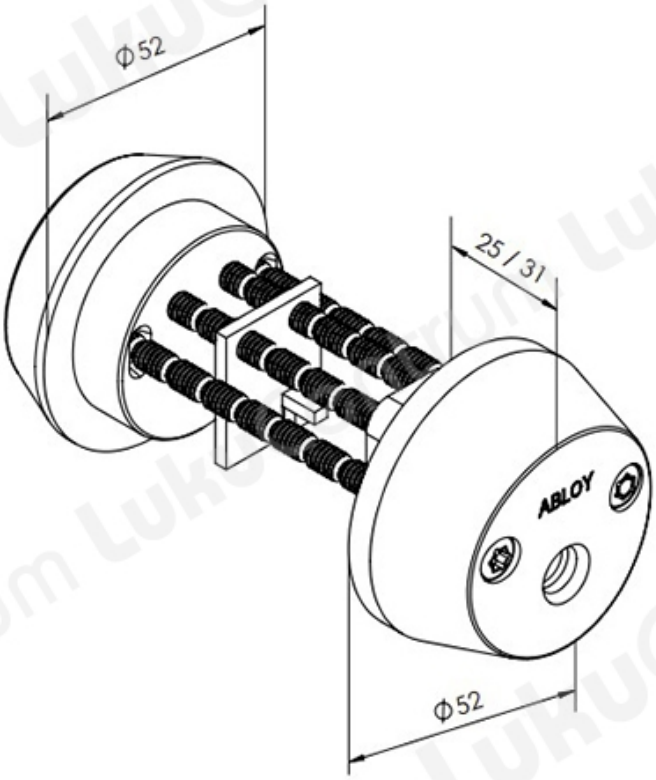TOOTENIMETUS	SOODUS	HIND
Ð¦Ð¸Ð¼Ð¼ÐµÑ?Ð½Ð¾Ñ?Ñ?Ð¾Ð¹ Ð¼Ð¾Ñ?Ñ?Ð°Ð¼Ð¸ Ð¸ÐÐ¼ÐÑ?Ñ?Ð¾Ð¼ ABLOY CY061U Novel CR (Ð±Ð»ÐµÑ•Ñ?Ñ•Ñ?Ð¸Ð¹ Ñ Ñ?Ð¾Ð¼, c 3 ÐºÐ»Ñ?Ñ?Ð°Ð¼Ð¸)		178.55 ?
Ð¦Ð¸Ð»Ð¸Ð½Ð´Ñ? ABLOY CY061U Novel HCR (Ð¼Ð°Ñ?Ð¾Ð²Ñ?Ð¹ Ñ Ñ?Ð¾Ð¼, c 3 ÐºÐ»Ñ?Ñ?Ð°Ð¼Ð¸)		196.51 ?
Ð¦Ð¸Ð»Ð¸Ð½Ð´Ñ? ABLOY CY061U Novel NiHa (Ð¼Ð°Ñ?Ð¾Ð²Ñ?Ð¹ Ð½Ð¸ÐºÐµÐ»Ñ?, c 3 ÐºÐ»Ñ?Ñ?Ð°Ð¼Ð¸)		205.44 ?