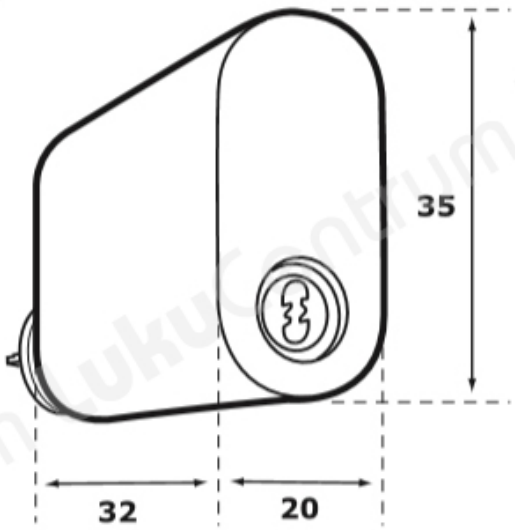TOOTENIMETUS	SOODUS	HIND
Ð¦Ð¸Ð¼Ð¼ÐµÑ?ÑŒÐ½Ñ?Ñ•Ñ?Ð¸Ð¹ Ñ Ñ?Ð¾Ð¼, c 3 ÐºÐ»Ñ?Ñ?Ð°Ð¼Ð¸)	67.90 ?	84.88 ?
Ð¦Ð¸Ð¼Ð¼ÐµÑ?ÑŒÐ½Ñ?Ñ•Ñ?Ð¸Ð¹ Ñ Ñ?Ð¾Ð¼, Ð±ÐµÐ· ÐºÐ»Ñ?Ñ?ÐµÐ¹)		45.19 ?
Ð¦Ð¸Ð¼Ð¼ÐµÑ?ÑŒÐ½Ñ? ABLOY CY201U Novel HCR (Ð¼Ð°Ñ?Ð¾Ð²Ñ?Ð¹ Ñ Ñ?Ð¾Ð¼, c 3 ÐºÐ»Ñ?Ñ?Ð°Ð¼Ð¸)	74.79 ?	93.49 ?
Ð¦Ð¸Ð¼Ð¼ÐµÑ?ÑŒÐ½Ñ? ABLOY CY201U Novel HCR (Ð¼Ð°Ñ?Ð¾Ð²Ñ?Ð¹ Ñ Ñ?Ð¾Ð¼, Ð±ÐµÐ· ÐºÐ»Ñ?Ñ?ÐµÐ¹)		49.67 ?
Ð¦Ð¸Ð¼Ð¼ÐµÑ?ÑŒÐ½Ñ? ABLOY CY201U Novel MS/HaLa (Ð¼Ð°Ñ?Ð¾Ð²Ð°Ñ• Ð»Ð°Ñ?Ñ?Ð½Ñ?, c 3 ÐºÐ»Ñ?Ñ?Ð°Ð¼Ð¸)	81.55 ?	101.94 ?
Ð¦Ð¸Ð¼Ð¼ÐµÑ?ÑŒÐ½Ñ? ABLOY CY201U Novel MS/HaLa (Ð¼Ð°Ñ?Ð¾Ð²Ð°Ñ• Ð»Ð°Ñ?Ñ?Ð½Ñ?, Ð±ÐµÐ· ÐºÐ»Ñ?Ñ?ÐµÐ¹)		52.67 ?
Ð¦Ð¸Ð¼Ð¼ÐµÑ?ÑŒÐ½Ñ? ABLOY CY201U Novel NiHa (Ð¼Ð°Ñ?Ð¾Ð²Ñ?Ð¹ Ð½Ð¸ÐºÐµÐ»Ñ?, c 3 ÐºÐ»Ñ?Ñ?Ð°Ð¼Ð¸)	78.14 ?	97.67 ?
Ð¦Ð¸Ð¼Ð¼ÐµÑ?ÑŒÐ½Ñ? ABLOY CY201U Novel NiHa (Ð¼Ð°Ñ?Ð¾Ð²Ñ?Ð¹ Ð½Ð¸ÐºÐµÐ»Ñ?, Ð±ÐµÐ· ÐºÐ»Ñ?Ñ?ÐµÐ¹)		51.96 ?