TOOTENIMETUS	SOODUS	HIND
[illegible]	[illegible]	[illegible]
Motor lock Abloy EL495FL/30 mm (handle deactivated in power off)		1396.05 ?
Motor lock Abloy EL495FL/35 mm (handle deactivated in power off)		1402.82 ?
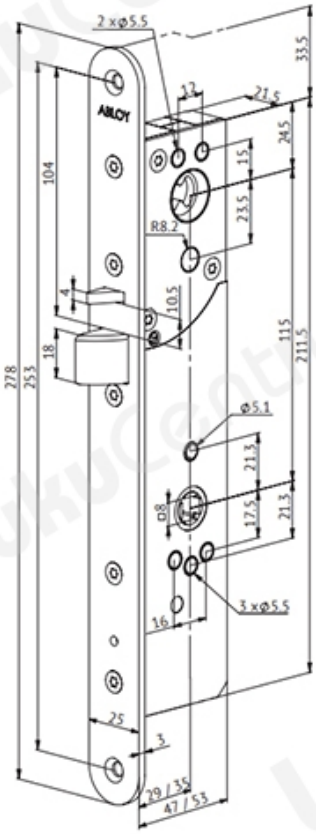
[illegible] electronic cylinder readers, push buttons and similar devices. The lock always powered and stays closed if any kind of input is triggered. The lock has Intelligent Self Diagnostic Function.