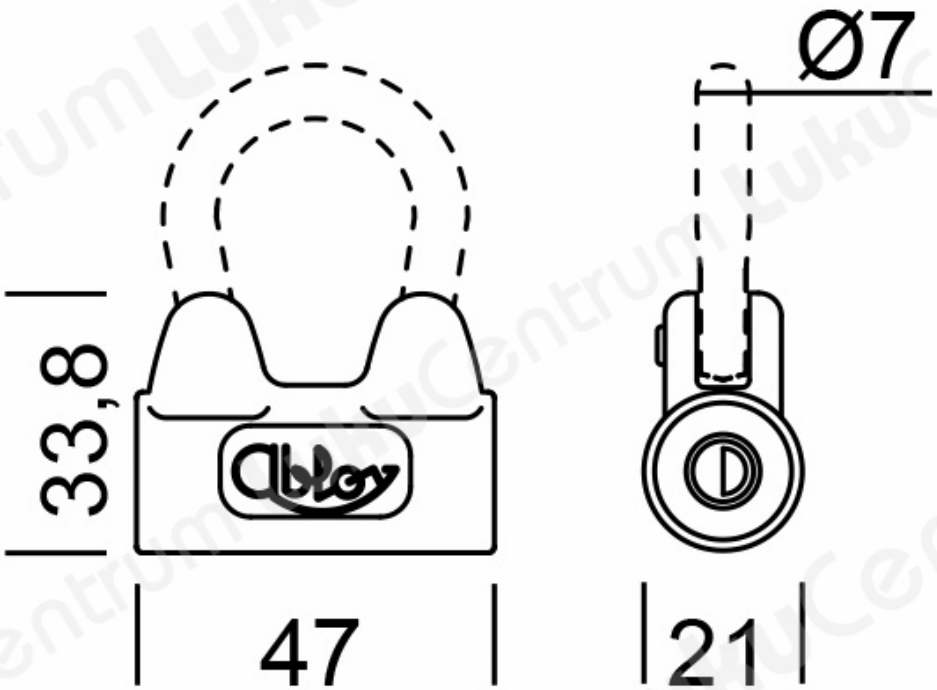TOOTENIMETUS	SOODUS	HIND
Padlock ABLOY 3021/76C Classic (w 2 keys)	33.08 ?	37.81 ?