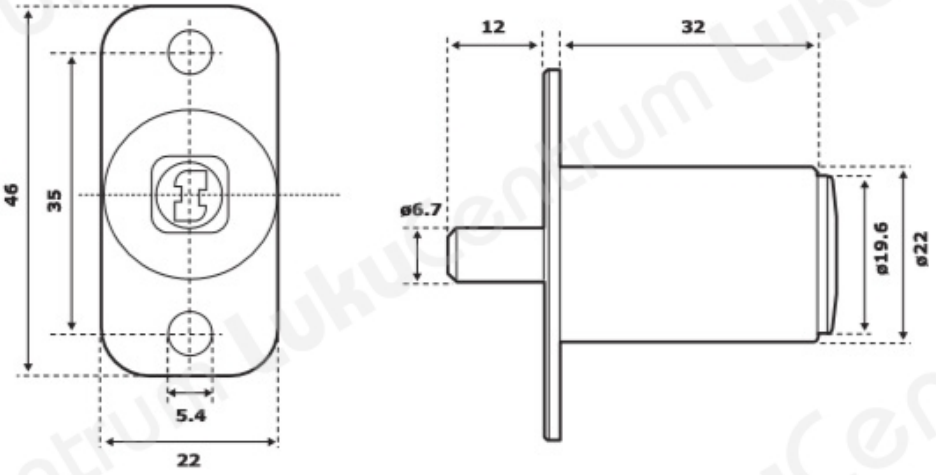TOOTENIMETUS	SOODUS	HIND
Push button lock ABLOY OF433T Protec2 (w 2 keys)		221.21 ?