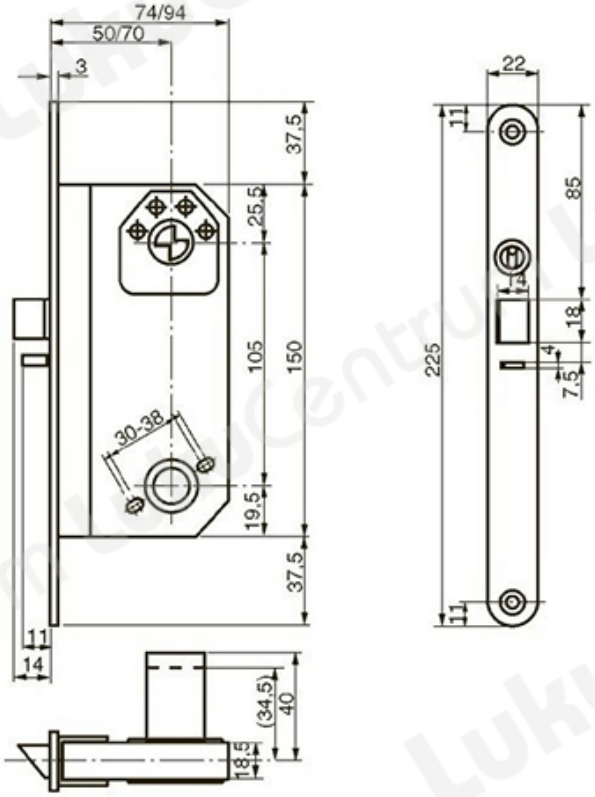TOOTENIMETUS	SOODUS	HIND
[illegible]	[illegible]	[illegible]
Lock case 5584-50	139.67 ?	159.62 ?