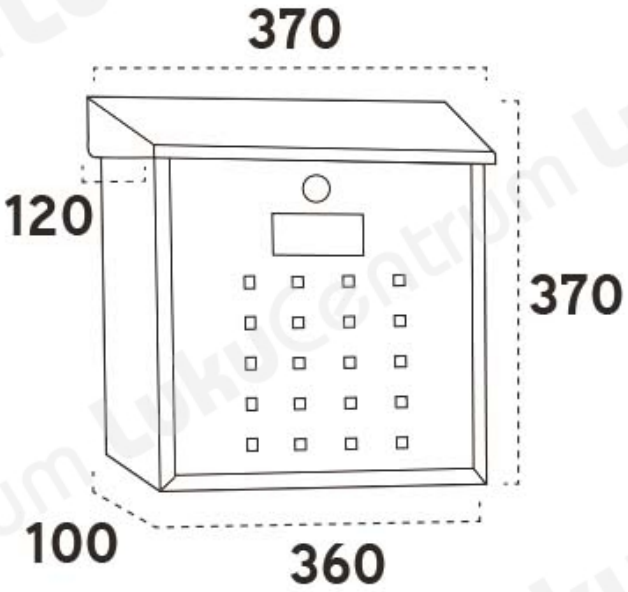TOOTENIMETUS	SOODUS	HIND
[illegible] Ð?Ð¾Ñ?Ñ?Ð¾Ð²Ñ?Ð¹ Ñ•Ñ?Ð¸Ðº Arregui Premium Maxi E5613-LK – (Ð·ÐµÐ»Ñ?Ð½Ñ?Ð¹)		32.40 ?