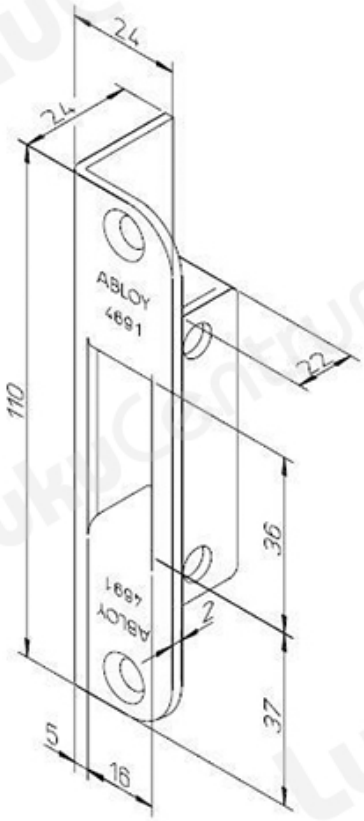TOOTENIMETUS	SOODUS	HIND
[illegible], [illegible], [illegible], [illegible], [illegible], [illegible], [illegible], [illegible], [illegible], [illegible], [illegible] Ð?Ñ?Ð²ÐµÑ?Ð½Ñ?Ðµ Ð¿Ð»Ð°Ð½Ð¹Ð¸ ABLOY 4691 Fe/ZL (Ð´Ð»Ñ• Ð´Ð²ÐµÑ?Ð¸)	4.71 ?	4.71 ?