TOOTENIMETUS	SOODUS	HIND
Ð?ÐºÐ¾Ð½Ð½Ð°Ñ• Ñ?Ñ?Ñ?ÐºÐ° ABLOY PRIME 55/062 Ms/CR (Ð±Ð»ÐµÑ•Ñ?Ñ•Ñ?Ð¸Ð¹ Ñ Ñ?Ð¾Ð¼)		22.16 ?
Ð?ÐºÐ¾Ð½Ð½Ð°Ñ• Ñ?Ñ?Ñ?ÐºÐ° ABLOY PRIME 55/062 Zn/CR (Ð±Ð»ÐµÑ•Ñ?Ñ•Ñ?Ð¸Ð¹ Ñ Ñ?Ð¾Ð¼, Ð±ÐµÐ· Ð²Ð¸Ð½Ñ?Ð¾Ð²)		7.98 ?
Ð?ÐºÐ¾Ð½Ð½Ð°Ñ• Ñ?Ñ?Ñ?ÐºÐ° ABLOY PRIME 55/062 Zn/CR (Ð±Ð»ÐµÑ•Ñ?Ñ•Ñ?Ð¸Ð¹ Ñ Ñ?Ð¾Ð¼, 16-20 Ð¼Ð¼, Ð±ÐµÐ· Ð²Ð¸Ð½Ñ?Ð¾Ð²)		15.25 ?
Ð?ÐºÐ¾Ð½Ð½Ð°Ñ• Ñ?Ñ?Ñ?ÐºÐ° ABLOY PRIME 55/062 Zn/CR (Ð±Ð»ÐµÑ•Ñ?Ñ•Ñ?Ð¸Ð¹ Ñ Ñ?Ð¾Ð¼, 16-33 Ð¼Ð¼, Ð±ÐµÐ· Ð²Ð¸Ð½Ñ?Ð¾Ð²)		11.54 ?
Ð?ÐºÐ¾Ð½Ð½Ð°Ñ• Ñ?Ñ?Ñ?ÐºÐ° ABLOY PRIME 55/062 Zn/CR (Ð±Ð»ÐµÑ•Ñ?Ñ•Ñ?Ð¸Ð¹ Ñ Ñ?Ð¾Ð¼)		25.57 ?
Ð?ÐºÐ¾Ð½Ð½Ð°Ñ• Ñ?Ñ?Ñ?ÐºÐ° ABLOY PRIME 55/062 Zn/CR (Ð±Ð»ÐµÑ•Ñ?Ñ•Ñ?Ð¸Ð¹ Ñ Ñ?Ð¾Ð¼, 16-20 Ð¼Ð¼)		28.47 ?
Ð?ÐºÐ¾Ð½Ð½Ð°Ñ• Ñ?Ñ?Ñ?ÐºÐ° ABLOY PRIME 55/062 Zn/CR (Ð±Ð»ÐµÑ•Ñ?Ñ•Ñ?Ð¸Ð¹ Ñ Ñ?Ð¾Ð¼, 16-33 Ð¼Ð¼)		17.16 ?
Ð?ÐºÐ¾Ð½Ð½Ð°Ñ• Ñ?Ñ?Ñ?ÐºÐ° ABLOY PRIME 55/062 Ms/HCR (Ð¼Ð°Ñ?Ð¾Ð²Ñ?Ð¹ Ñ Ñ?Ð¾Ð¼)		24.30 ?
Ð?ÐºÐ¾Ð½Ð½Ð°Ñ• Ñ?Ñ?Ñ?ÐºÐ° ABLOY PRIME 55/062 Ms/KiLa (Ð¿Ð¾Ð»Ð¸Ñ?Ð¾Ð²Ð°Ð½Ð½Ð°Ñ• Ð»Ð°Ñ?Ñ?Ð½Ñ?)		23.70 ?
Ð?ÐºÐ¾Ð½Ð½Ð°Ñ• Ñ?Ñ?Ñ?ÐºÐ° ABLOY PRIME 55/062 Ms/HaLa (Ð»Ð°Ñ?Ñ?Ð½Ñ? Ð¾Ð±Ñ?Ð°Ð±Ð¾Ñ?Ð°Ð½Ñ?Ð¹ Ñ?Ñ?Ñ?ÐºÐ¾Ð¹)		24.39 ?
Ð?ÐºÐ¾Ð½Ð½Ð°Ñ• Ñ?Ñ?Ñ?ÐºÐ° ABLOY PRIME 55/062 Zn/VAL (Ð±ÐµÐ»Ñ?Ð¹ RAL 9010, Ð±ÐµÐ· Ð²Ð¸Ð½Ñ?Ð¾Ð²)		9.79 ?
Ð?ÐºÐ¾Ð½Ð½Ð°Ñ• Ñ?Ñ?Ñ?ÐºÐ° ABLOY PRIME 55/062 Zn/VAL (Ð±ÐµÐ»Ñ?Ð¹ RAL 9010)		11.50 ?

LukuCentrum

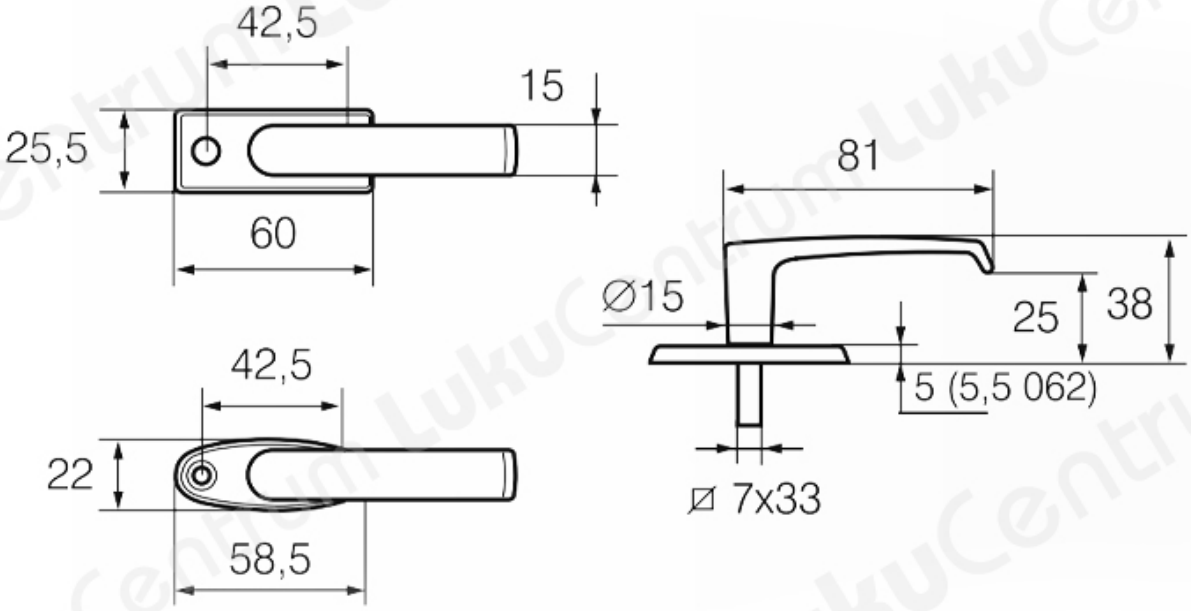
42,5
15
25,5
60
42,5
22
58,5
81
∅15
25
38
5 (5,5 062)
⌀ 7x33