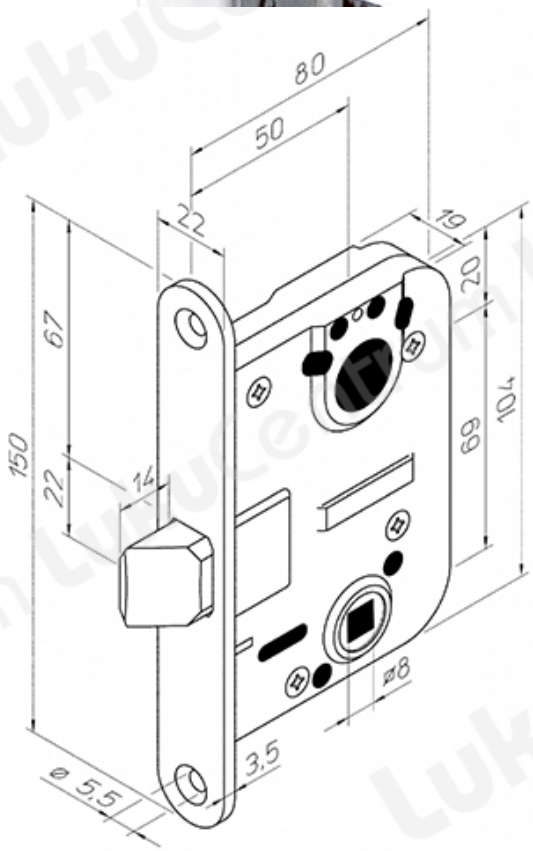TOOTENIMETUS	SOODUS	HIND
[illegible]		
Lock case ABLOY 4290 Fe/ZL (right)	69.82 ?	79.79 ?
Lock case ABLOY 4290 Fe/ZL (left)	69.82 ?	79.79 ?