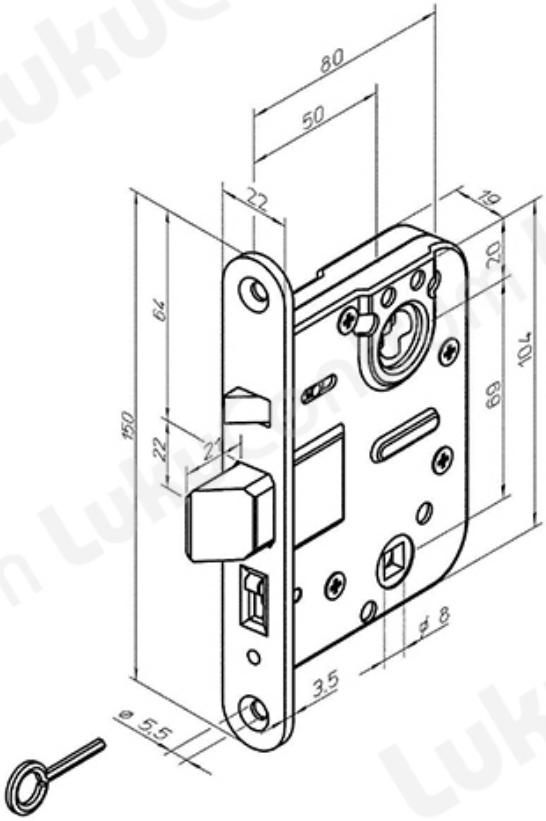TOOTENIMETUS	SOODUS	HIND
[illegible]	[illegible]	[illegible]
Ð?Ð¾Ñ?Ð¿Ñ?Ñ• Ð·Ð°Ð¼Ðºð° ABLOY LC100/50 Fe/ZL (Ð¿Ñ?Ð°Ð²Ð°Ñ•)	73.64 ?	84.16 ?