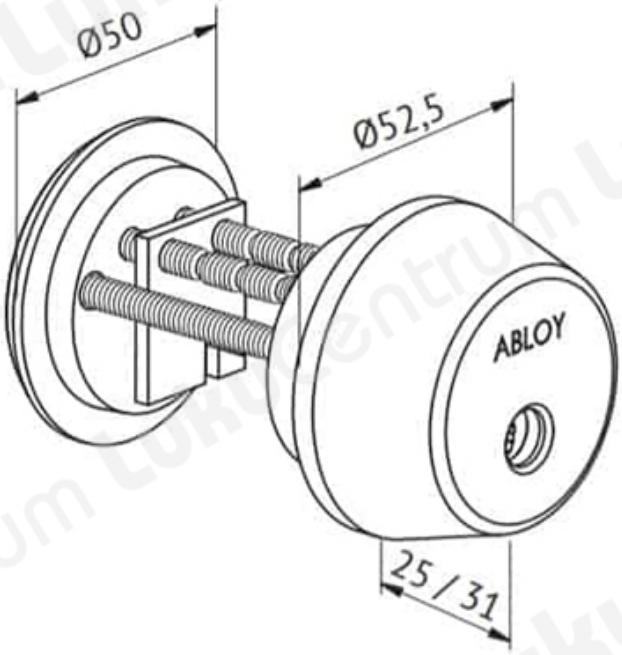TOOTENIMETUS	SOODUS	HIND
Ð¦Ð¸Ð¸Ð½Ð´Ñ? ABLOY CY060T Protec2 CR (Ð±Ð»ÐµÑ•Ñ?Ñ•Ñ?Ð¸Ð¹ Ñ Ñ?Ð¾Ð¼, с 3 ÐºÐ»Ñ?Ñ?Ð°Ð¼Ð¸)		212.07 ?
Ð¦Ð¸Ð¸Ð½Ð´Ñ? ABLOY CY060T Protec2 CR (Ð±Ð»ÐµÑ•Ñ?Ñ•Ñ?Ð¸Ð¹ Ñ Ñ?Ð¾Ð¼, Ð±ÐµÐ· ÐºÐ»Ñ?Ñ?ÐµÐ¹)		142.59 ?
Ð¦Ð¸Ð»Ð¸Ð½Ð´Ñ? ABLOY CY060T Protec2 HCR (Ð¼Ð°Ñ?Ð¾Ð²Ñ?Ð¹ Ñ Ñ?Ð¾Ð¼, с 3 ÐºÐ»Ñ?Ñ?Ð°Ð¼Ð¸)		233.25 ?
Ð¦Ð¸Ð»Ð¸Ð½Ð´Ñ? ABLOY CY060T Protec2 HCR (Ð¼Ð°Ñ?Ð¾Ð²Ñ?Ð¹ Ñ Ñ?Ð¾Ð¼, Ð±ÐµÐ· ÐºÐ»Ñ?Ñ?ÐµÐ¹)		156.86 ?
Ð¦Ð¸Ð»Ð¸Ð½Ð´Ñ? ABLOY CY060T Protec2 NiHa (Ð¼Ð°Ñ?Ð¾Ð²Ñ?Ð¹ Ð½Ð¸ÐºÐµÐ»Ñ?, с 3 ÐºÐ»Ñ?Ñ?Ð°Ð¼Ð¸)		243.89 ?
Ð¦Ð¸Ð»Ð¸Ð½Ð´Ñ? ABLOY CY060T Protec2 NiHa (Ð¼Ð°Ñ?Ð¾Ð²Ñ?Ð¹ Ð½Ð¸ÐºÐµÐ»Ñ?, Ð±ÐµÐ· ÐºÐ»Ñ?Ñ?ÐµÐ¹)		163.93 ?