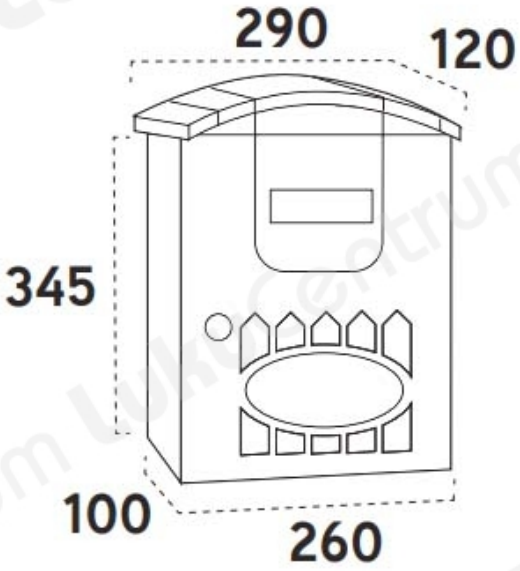TOOTENIMETUS	SOODUS	HIND
[illegible]stant polystyrene. Non corrosive material. Ð?Ð¾Ñ?Ñ?Ð¾Ð²Ñ?Ð¹ Ñ•Ñ?Ð¸Ðº Arregui Costa E-5301 (Ð±ÐµÐ»Ñ?Ð¹)		0.00 ?